MALE END VIEW (P1)

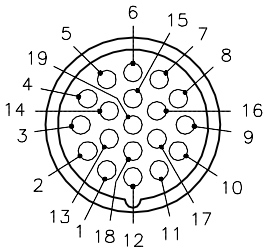

1 = VIOLET
2 = RED
3 = GRAY
4 = RED/BLUE
5 = GREEN
6 = BLUE
7 = GRAY/PINK
8 = WHT/GRN
9 = WHT/YEL
10 = WHT/GRY
11 = BLACK
12 = GRN/YEL
13 = YEL/BRN
14 = BRN/GRN
15 = WHITE
16 = YELLOW
17 = PINK
18 = GRY/BRN
19 = BROWN

M23 connector

FEMALE END VIEW (J1)

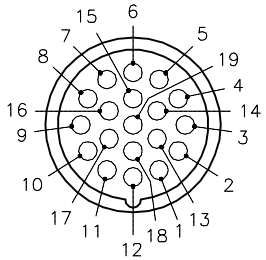

1 = VIOLET
2 = RED
3 = GRAY
4 = RED/BLUE
5 = GREEN
6 = BLUE
7 = GRAY/PINK
8 = WHT/GRN
9 = WHT/YEL
10 = WHT/GRY
11 = BLACK
12 = GRN/YEL
13 = YEL/BRN
14 = BRN/GRN
15 = WHITE
16 = YELLOW
17 = PINK
18 = GRY/BRN
19 = BROWN

M23 connector

SPECIFICATIONS

CONTACT CARRIER MATERIAL	NYLON or PBT
MOLDED HEAD MATERIAL/COLOR	TPU/BLACK
CONTACT MATERIAL/PLATING	BRASS/GOLD
COUPLING NUT MATERIAL/FINISH	STAINLESS STEEL/PASSIVATED
RATED CURRENT [A]	9.0 A (PINS 6,12,19), 2.0 A (ALL OTHERS)
RATED VOLTAGE [V]	150 V
OUTER JACKET MATERIAL/COLOR	PVC/BLUE
CONDUCTOR INSULATION MATERIAL	XLPE
NUMBER OF CONDUCTORS [AWG]	3x18 AWG; 16x22 AWG
TEMPERATURE RANGE	−40°C to +105°C (−40°F to +221°F)
DRAIN/SHIELD	20 AWG/ALUMINIUM−POLYESTER FOIL
PROTECTION CLASS	IEC IP67
CABLE RATINGS	UL: ITC/PLTC 105°C CSA: CIC, 90C, 300V C(UL) C22.2 NO245/1309 MARINE SHIPBOARD/IEEE 1580

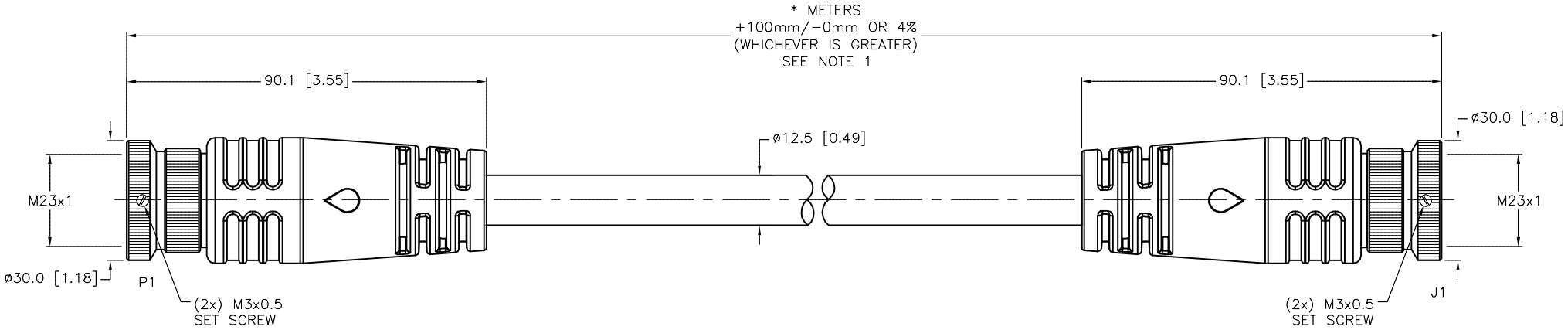

SOURCE DRAWING - FOR REFERENCE ONLY

NOTES:

1. "*" INDICATES CABLE LENGTH IN METERS. CONTACT TURCK TO ORDER SPECIFIC LENGTHS.

REV	DESCRIPTION	BY	DATE	ECO NO.
A	DRAWING RELEASE	TV	08/24/15	

RELATED DOCUMENTS
1.
2.
3.
4.

3RD ANGLE PROJECTION

THIS DRAWING IS CONFIDENTIAL AND THE PROPERTY OF TURCK INC. USE OF THIS DOCUMENT WITHOUT WRITTEN PERMISSION IS PROHIBITED.

TURCK INC
High Technology Sensors and Automation Controls

3000 CAMPUS DRIVE
MINNEAPOLIS, MN 55441
1-800-544-7769
(763) 553-7300
(763) 553-0708 fax
turck.com

MATERIAL: SEE SPECIFICATIONS

FINISH: SEE SPECIFICATIONS

ALL DIMENSIONS DISPLAYED ON THIS DRAWING ARE FOR REFERENCE ONLY

CONTACT TURCK FOR MORE INFORMATION

DRFT: TV | DATE: 08/10/15
APVD: A.M. | SCALE: 1=1.5

UNIT OF MEASUREMENT
MILLIMETER [INCH]
DO NOT SCALE THIS DRAWING

DESCRIPTION: P−CSMT CKMT 1930−965−*

IDENTIFICATION NO.

REV: A

FILE: 777035939 | SHEET 1 OF 1

Approved 08/18/2015, work order #84893 by A.M.